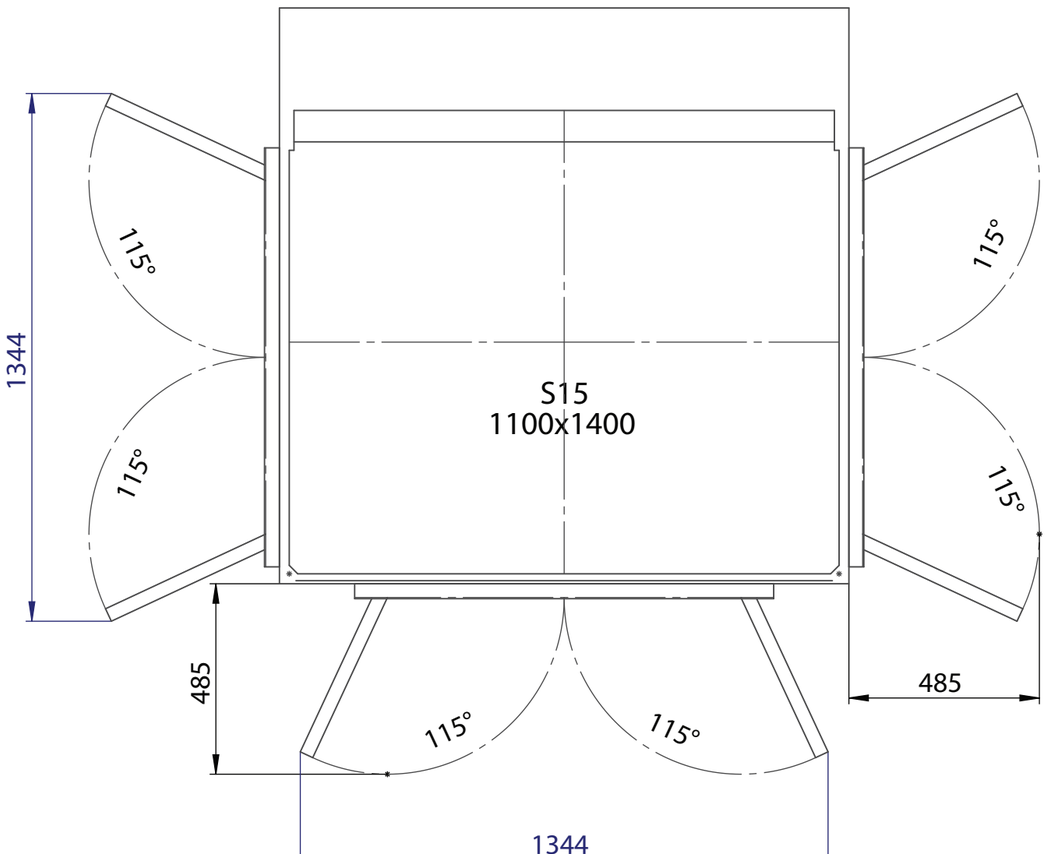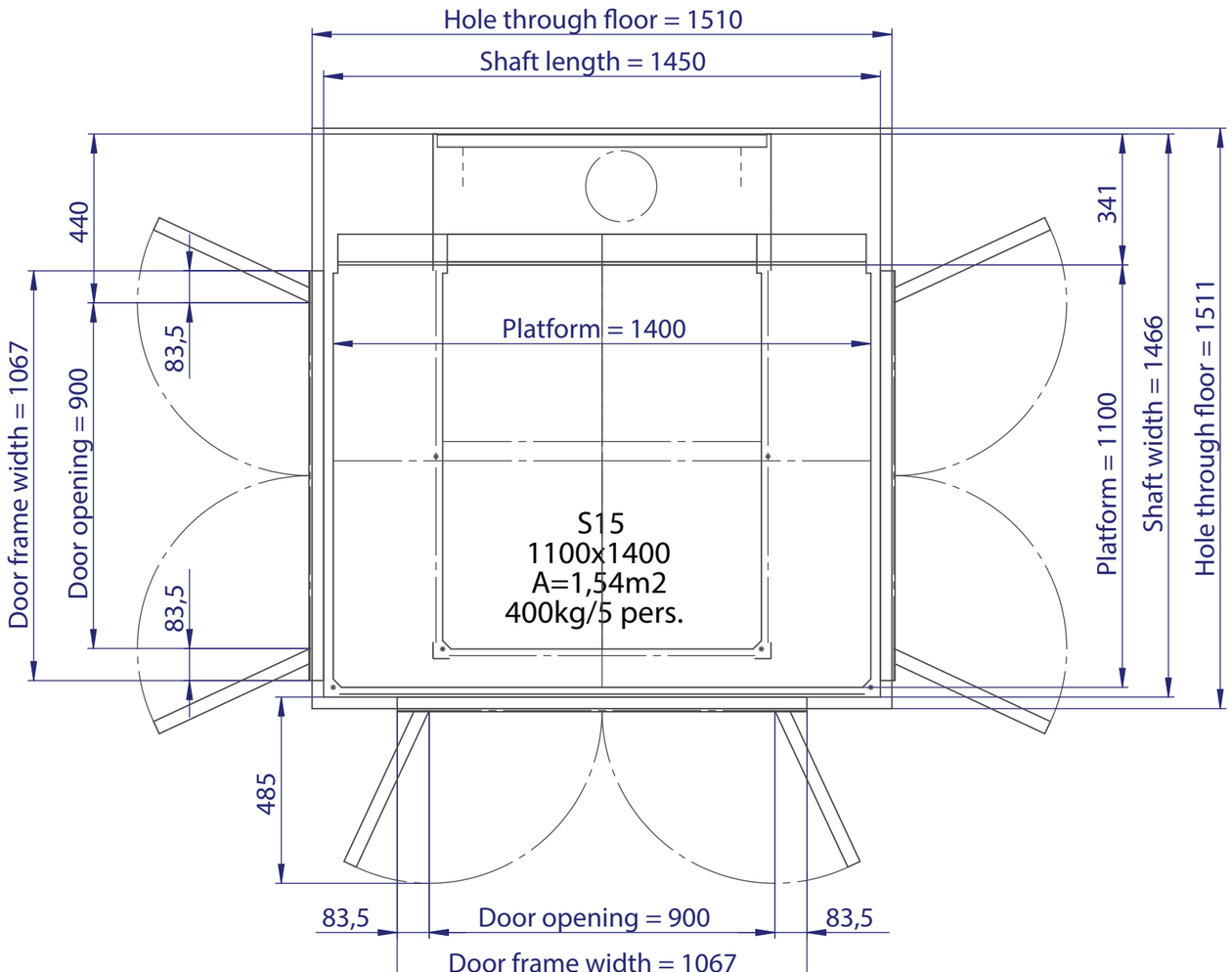ARITCO
INSPIRING MOTIONS